Product data sheet

TLWE78201 LED wall motorized trolley LG 130 inch All-in-one

Dimensions in mm [inch]

ITEM NO.	PART NUMBER	DESCRIPTION	QTY.
1	PFTE 7120	Motorized floor lift, LED&LCD	1
2	INT8201	LED wall interface for LG130 inch All-in-one (LAAF SERIE)	1

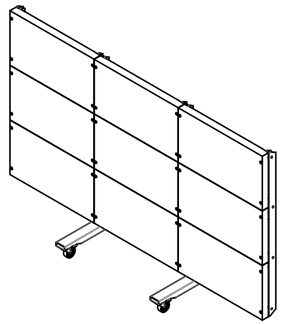

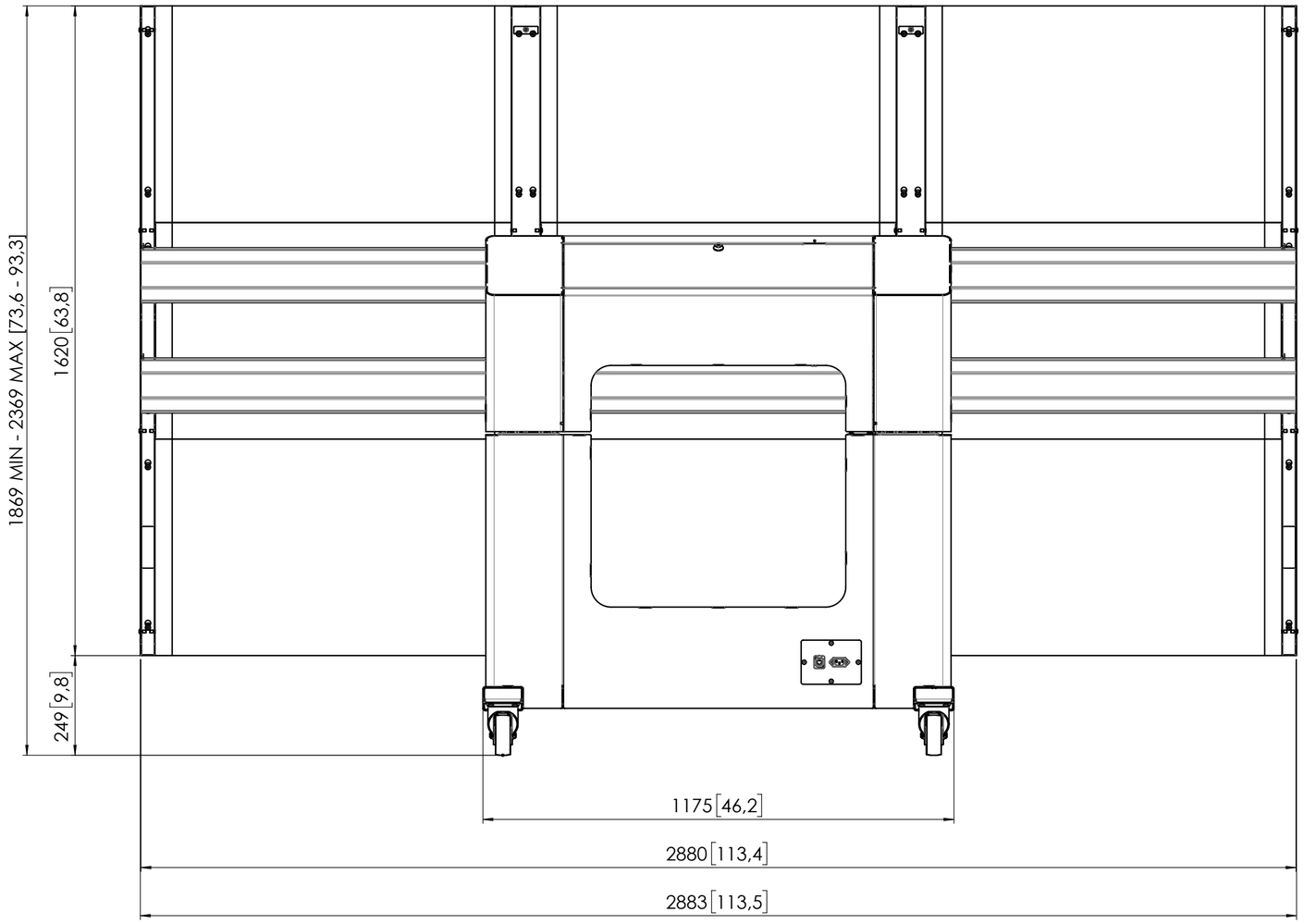

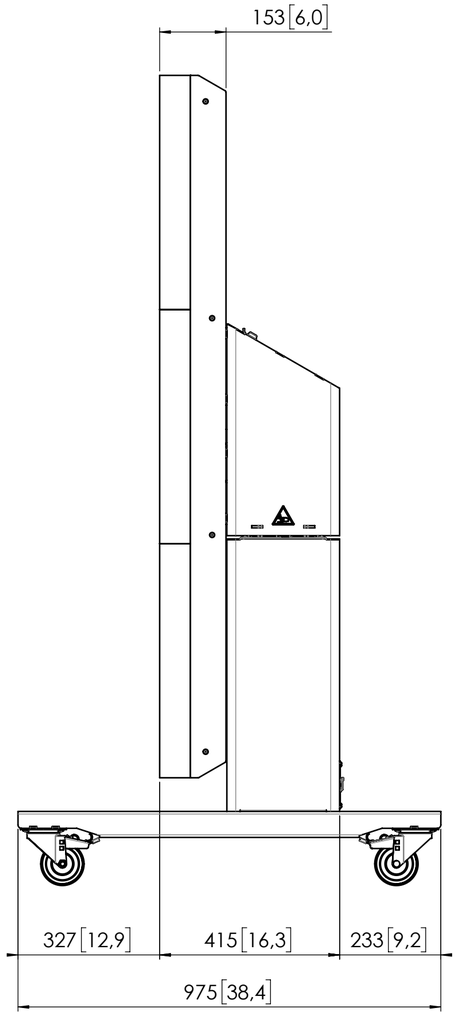

Note: This document and specifications herein are confidential and the exclusive property of Vogel's Products b.v. Neither this design nor any information contained in this drawing may be reproduced or disclosed to others without written consent of Vogel's Products b.v. The design and information will not be reproduced, copied or used, either in part or in its entirety, as the basis for the manufacture or sale of items without written permission.
Warning: Please study all instructions and illustrations carefully before installation.
Information in this document is subject to change without further notice.