www.kondator.se

Powerdot

935-PD22

POWER dot

CONTENT:

x1

x1

x1

A DRILL

B INSERT

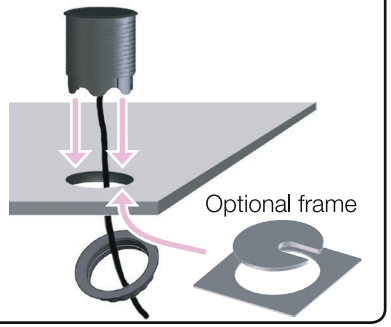

C TURN CLOCKWISE & PLUG IN

Turn the plastic fastening nut as far up the thread as possible. Make sure that it has been thoroughly tightened. Lastly, plug the plug into the wall socket.

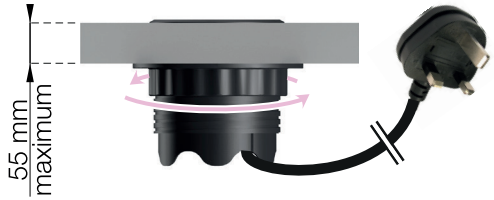

1 CONNECT

Connect plug to Powerdot.

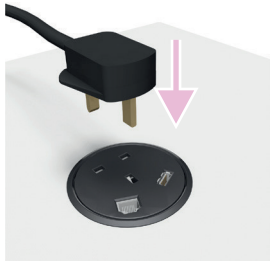

2 RELEASE

Rotate counter clockwise.

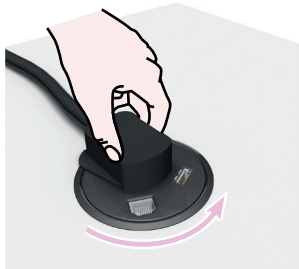

3 ADJUST

The inner part should now be loose. Adjust to desired level (see next step).

- 1 **USB Charger** (5V, 2.1A)
- 1 **Ethernet port** (RJ45)
- 1 **UK socket** /w 1250 mm cable

4 ADJUST LEVELS

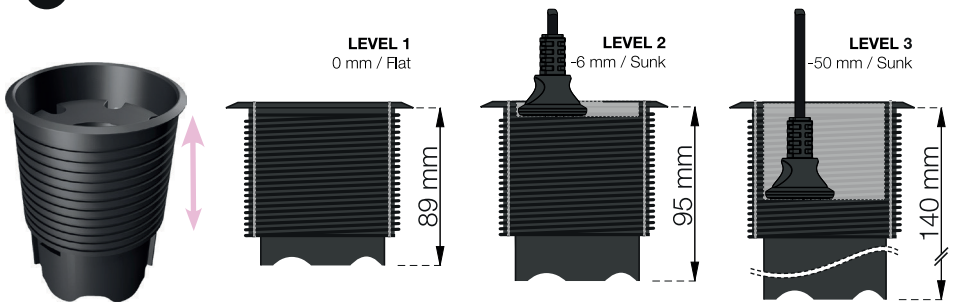

5a LOCK Level 1 & 2

Rotate clockwise.

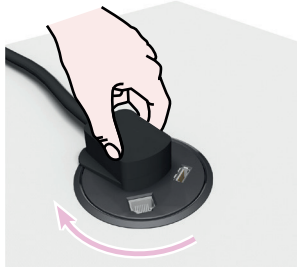

5b LOCK Level 3

Rotate.

by KONDATOR

Patent pending PCT, China, EP

Revised 191111

Kondator AB, Energivägen 8 - Box 121, SE-135 23 TYRESÖ, SWEDEN