DRAWING NAME	
CAVITY/SET	
CAV. MATERIAL	

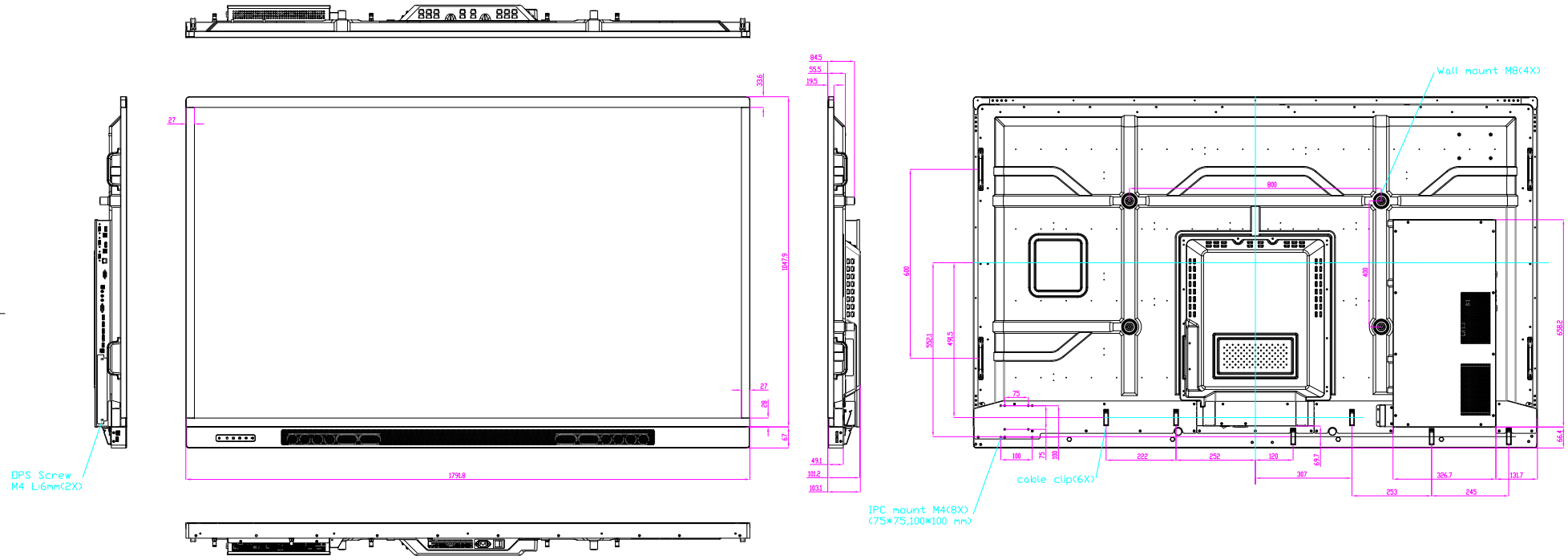

NOTES: All parts must accord with R.O.H.S. norm.

1		AVF7550				
NO	MODEL NO.	PARTS NAME		PARTS NO.		MATERIAL/FINISH
APPROVALS		DATE	SCALE 1:1	UNIT M/M	3rd ANGLE	TOLERANCE LIMITS 0-25mm ±0.05 25-100mm ±0.10 100-300mm ±0.20 300-600mm ±0.40 600-1000mm ±0.60 1000-2000mm ±0.80 ANGLE ±2°	REV. W0
DESIGN:	Duck	2018/5/24				
CHECKED:	S.C	2018/5/24	SHEET: 1 OF 1	DO NOT SCALE DRAWING		SIZE A2
APPROVAL:	Devin	2018/5/24	AGILE			